•K'SUS•
cadre suspension pour dalle LED
par
WOOD LIGHT
SINCE 2020
KRAKEN LIGHTING
MADE IN FRANCE

K'SUS GAMME

GÉNÉRALITÉS / GENERALITIES

INCLUS :
CADRE EN BOIS MASSIF CHÊNE OU FRÊNE
ÉTRIER GALVA
PLACE pour INTEGRATION du DRIVER
4 SUSPENTES filins acier en 3m
NON INCLUS :
PLAQUE DE FERMETURE SUPÉRIEURE
CÂBLE D'ALIMENTATION (en option)
DALLE LED (en option)

INCLUDED:
SOLID WOOD FRAME OAK OR ASH
FIXING BRACKET
LOCATION FOR LED DRIVER
4 PENDANTS STEEL CABLE 3M
NOT INCLUDED:
TOP CLOSURE PLATE
POWER CABLE (optional)
LED PANEL (optional)

OPTION :
PLAQUE DE FERMETURE SUPÉRIEUR

CAPOT DE FERMETURE KSUS33
CAPOT DE FERMETURE KSUS66
CAPOT DE FERMETURE KSUS312

OPTIONAL:
TOP CLOSURE PLATE

TOP CLOSURE FOR KSUS33
TOP CLOSURE FOR KSUS66
TOP CLOSURE FOR KSUS312

PATERE DE CONNEXION :
PATERE BOIS MASSIF
BORNIER 3 PÔLES

PATERE RONDE
PATERE OVALE

CONNECTION BOX:
SOLID WOOD BOX
3 WIRES SOCKET

ROUND BOX
OVALE BOX

CHÊNE NATUREL NATURAL OAK | FRÊNE NATUREL NATURAL ASH | FRÊNE BLANC WHITE ASH | FRÊNE BRUN BROWN ASH | FRÊNE TECK TEAK ASH | FRÊNE ACAJOU MAHOGANY ASH | FRÊNE WENGÉ WENGE ASH

ESSENCES ET FINITIONS

WOOD ESSENCE AND FINISHING

CHÊNE NATUREL — NATURAL OAK

FRÊNE NATUREL — NATURAL ASH

FRÊNE BLANC — WHITE ASH

FRÊNE BRUN — BROWN ASH

FRÊNE TECK — TEAK ASH

FRÊNE ACAJOU — MAHOGANY ASH

FRÊNE WENGÉ — WENGE ASH

KSUS33

DESIGNED BY NIKOFORGET

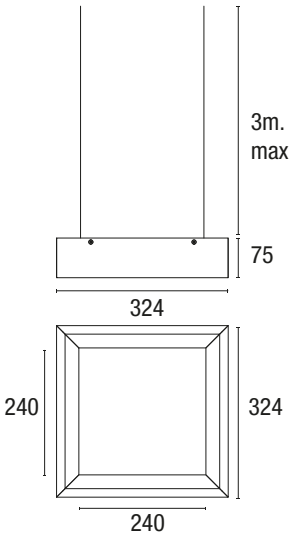

DESCRIPTIF GÉNÉRAL

Accessoire pour dalle LED 295x295mm
S'adapte à plus de 90% des dalles LED du marché
Cadre en bois massif issu de forêts françaises éco-gérées
Finition vernis M1
S'installe en suspension
Étrier de fixation métallique galva.
Permet d'intégrer le driver.
Dalle LED non incluse (en option)

GENERAL DESCRIPTION

Accessory for LED PANEL 295x295mm
Compatible with 90% of LED panels market
Solid wood frame rom eco-managed French forests
M1 varnish finish
Installs as pendant
Galvanized metal fixing bracket
Allows to integrate the driver
LED panel not included (optional)

ESSENCES ET FINITIONS

WOOD ESSENCE AND FINISHING

CHÊNE NATUREL — NATURAL OAK

FRÊNE NATUREL — NATURAL ASH

FRÊNE BLANC — WHITE ASH

FRÊNE BRUN — BROWN ASH

FRÊNE TECK — TEAK ASH

FRÊNE ACAJOU — MAHOGANY ASH

FRÊNE WENGÉ — WENGE ASH

KSUS66

DESIGNED BY NIKOFORGET

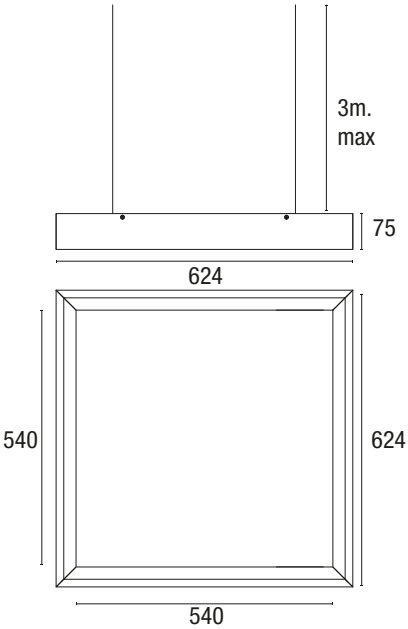

DESCRIPTIF GÉNÉRAL

Accessoire pour dalle LED 595x595mm
S'adapte à plus de 90% des dalles LED du marché
Cadre en bois massif issu de forêts françaises éco-gérées
Finition vernis M1
S'installe en suspension
Étrier de fixation métallique galva.
Permet d'intégrer le driver.
Dalle LED non incluse (en option)

GENERAL DESCRIPTION

Accessory for LED PANEL 595x595mm
Compatible with 90% of LED panels market
Solid wood frame rom eco-managed French forests
M1 varnish finish
Installs as pendant
Galvanized metal fixing bracket
Allows to integrate the driver
LED panel not included (optional)

ESSENCES ET FINITIONS

WOOD ESSENCE AND FINISHING

CHÊNE NATUREL — NATURAL OAK

FRÊNE NATUREL — NATURAL ASH

FRÊNE BLANC — WHITE ASH

FRÊNE BRUN — BROWN ASH

FRÊNE TECK — TEAK ASH

FRÊNE ACAJOU — MAHOGANY ASH

FRÊNE WENGÉ — WENGE ASH

KSUS312

DESIGNED BY NIKOFORGET

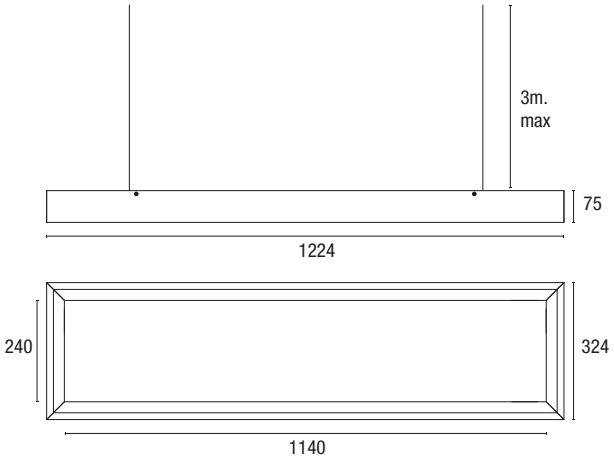

DESCRIPTIF GÉNÉRAL

Accessoire pour dalle LED 295x1195mm
S'adapte à plus de 90% des dalles LED du marché
Cadre en bois massif issu de forêts françaises éco-gérées
Finition vernis M1
S'installe en suspension
Étrier de fixation métallique galva.
Permet d'intégrer le driver.
Dalle LED non incluse (en option)

GENERAL DESCRIPTION

Accessory for LED PANEL 295x1195mm
Compatible with 90% of LED panels market
Solid wood frame rom eco-managed French forests
M1 varnish finish
Installs as pendant
Galvanized metal fixing bracket
Allows to integrate the driver
LED panel not included (optional)

FRÊNE BLANC WHITE ASH

FRÊNE TECK TEAK ASH

FRÊNE ACAJOU MAHOGANY ASH

FRÊNE WENGÉ WENGE ASH

FRÊNE NATUREL NATURAL ASH

CHÊNE NATUREL NATURAL OAK

FRÊNE BRUN BROWN ASH

WOOD LIGHT

SINCE 2020

KRAKEN LIGHTING

MADE IN FRANCE

TOUS DROITS RÉSERVÉS © KRAKEN LIGHTING | Copyright KRAKEN LIGHTING | Images non contractuelles, sujet à modifications